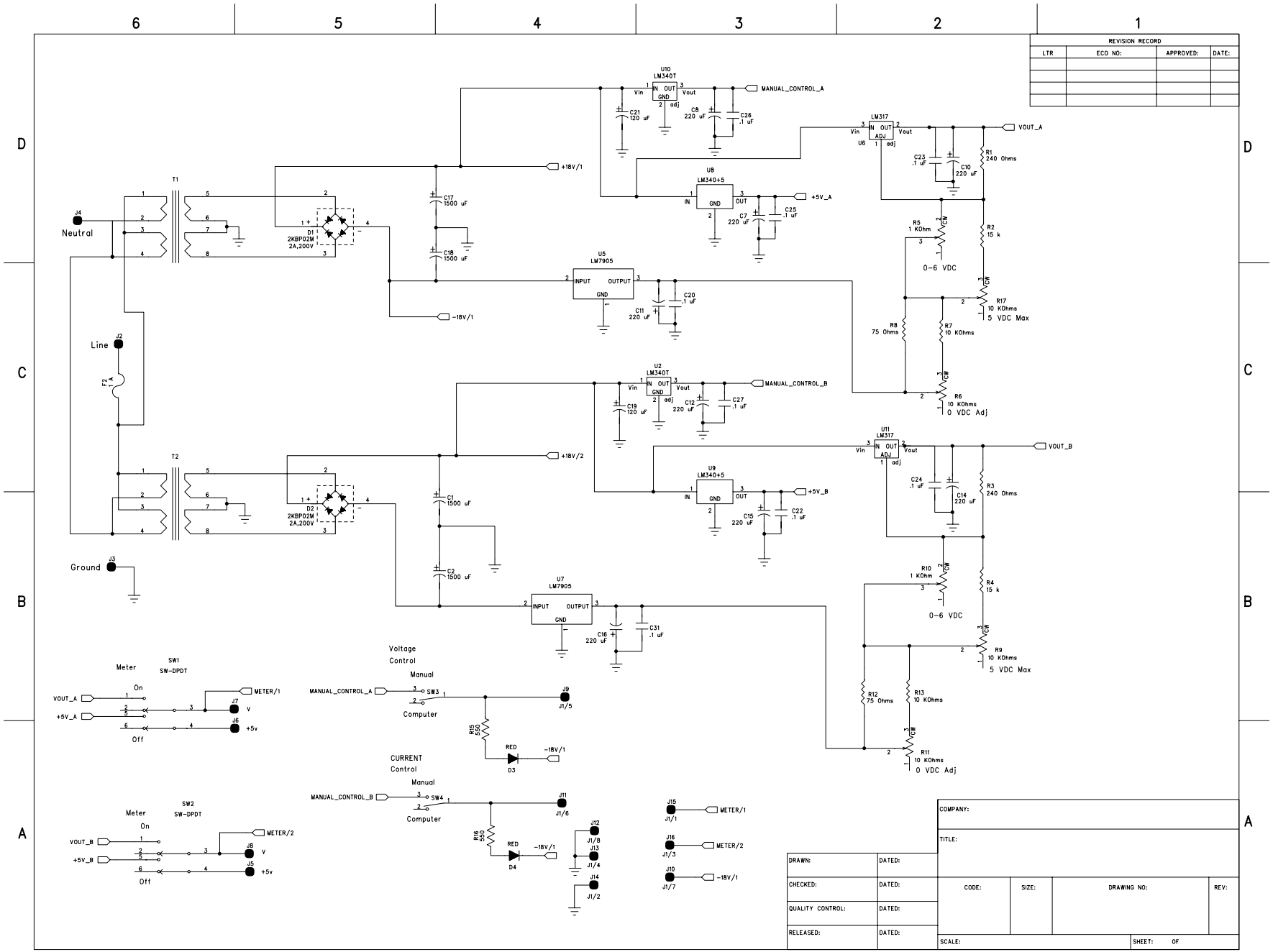
REVISION RECORD
LTR
ECO NO:
APPROVED:
DATE:
U10 LM340T
MANUAL_CONTROL_A
C21 120 uF
C8 220 uF
C26 .1 uF
LM317
VOUT_A
C23 .1 uF
C10 220 uF
R1 240 Ohms
+18V/1
U8 LM340+5
+5V_A
C7 220 uF
C25 .1 uF
R5 1 KOhm
R2 15 k
0-6 VDC
T1
J4
Neutral
D1 2KBP02M 2A,200V
C17 1500 uF
C18 1500 uF
U5 LM7905
C20 .1 uF
C11 220 uF
-18V/1
R17 10 KOhms 5 VDC Max
R8 75 Ohms
R7 10 KOhms
Line
J2
F2 1 A
U2 LM340T
MANUAL_CONTROL_B
C19 120 uF
C12 220 uF
C27 .1 uF
R6 10 KOhms 0 VDC Adj
U11 LM317
VOUT_B
C24 .1 uF
C14 220 uF
R3 240 Ohms
+18V/2
T2
D2 2KBP02M 2A,200V
U9 LM340+5
+5V_B
C15 220 uF
C22 .1 uF
C1 1500 uF
C2 1500 uF
Ground
J3
R10 1 KOhm
R4 15 k
0-6 VDC
U7 LM7905
C16 220 uF
C31 .1 uF
R9 10 KOhms 5 VDC Max
R12 75 Ohms
R13 10 KOhms
R11 10 KOhms 0 VDC Adj
Meter
SW1 SW-DPDT
On
Off
VOUT_A
+5V_A
METER/1
J7 V
J6 +5v
Voltage Control
Manual
Computer
MANUAL_CONTROL_A
SW3
J9 J1/5
R15 550
RED
D3
-18V/1
CURRENT Control
MANUAL_CONTROL_B
SW4
J11 J1/6
R16 550
D4
J12 J1/8
J13 J1/4
J14 J1/2
SW2 SW-DPDT
VOUT_B
+5V_B
METER/2
J8 V
J5 +5v
J15 J1/1 METER/1
J16 J1/3 METER/2
J10 J1/7 -18V/1
COMPANY:
TITLE:
DRAWN:
DATED:
CHECKED:
QUALITY CONTROL:
RELEASED:
CODE:
SIZE:
DRAWING NO:
REV:
SCALE:
SHEET: OF